MAIL BOX STANDARDS

NOT DRAWN TO SCALE

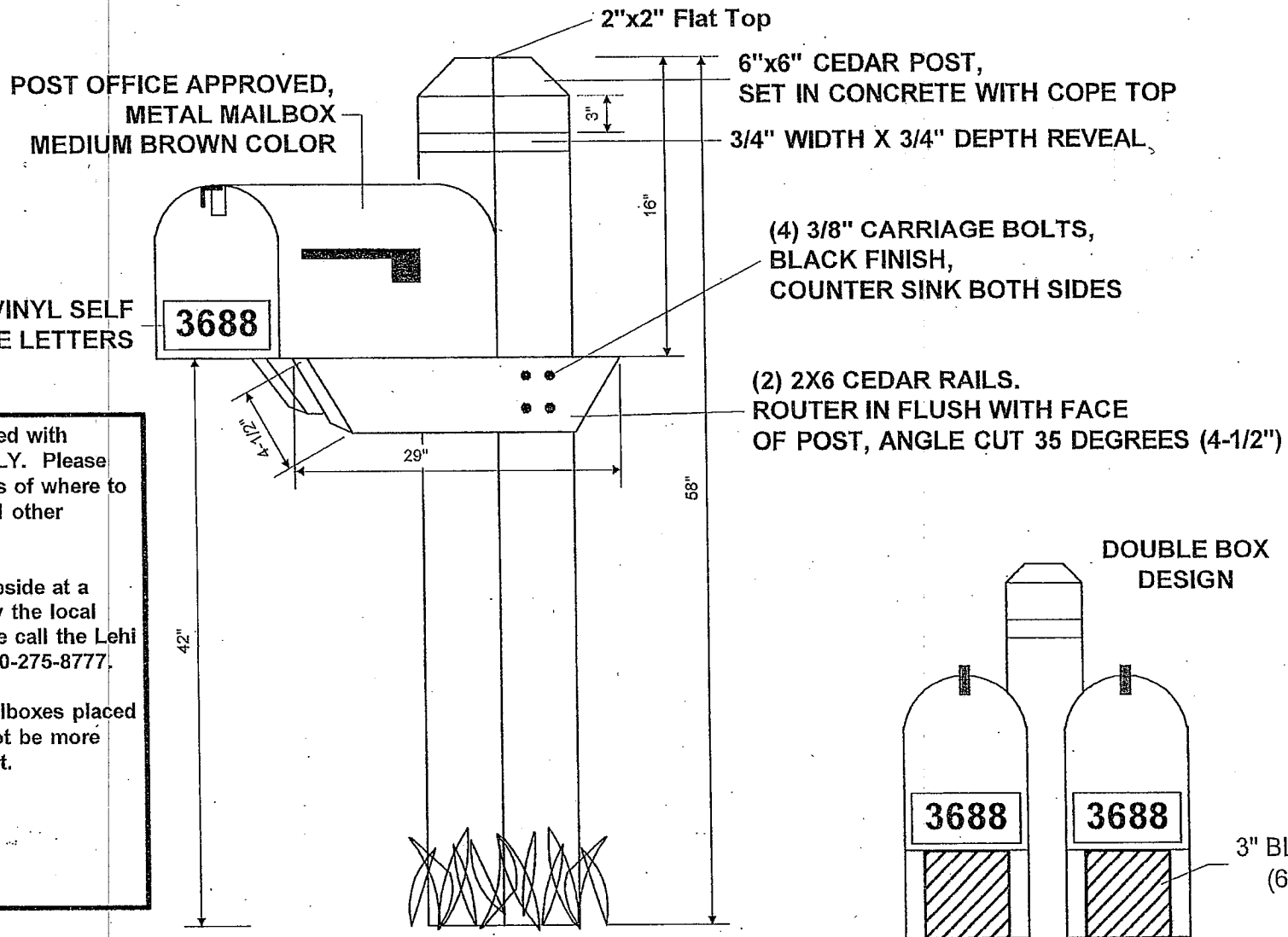

* Wood to be stained with Monterey Grey ONLY. Please call to get locations of where to purchase stain and other materials.

* Box must be curbside at a spot designated by the local Post Office. Please call the Lehi Post Office at 7-800-275-8777.
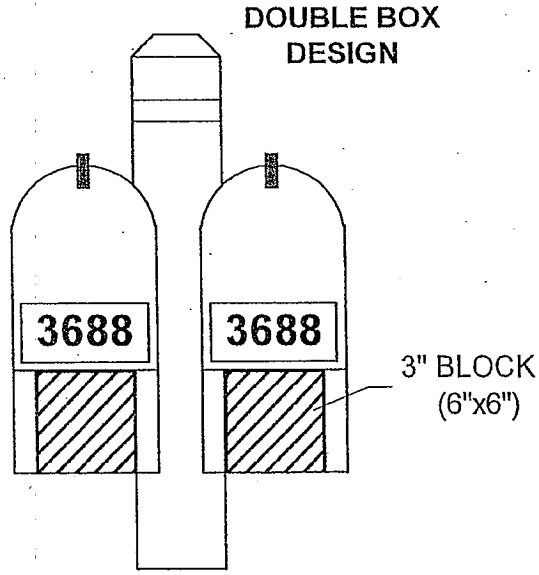
* Two or more mailboxes placed together should not be more than 6 inches apart.